QBeam Connector Customer Assembly Instructions

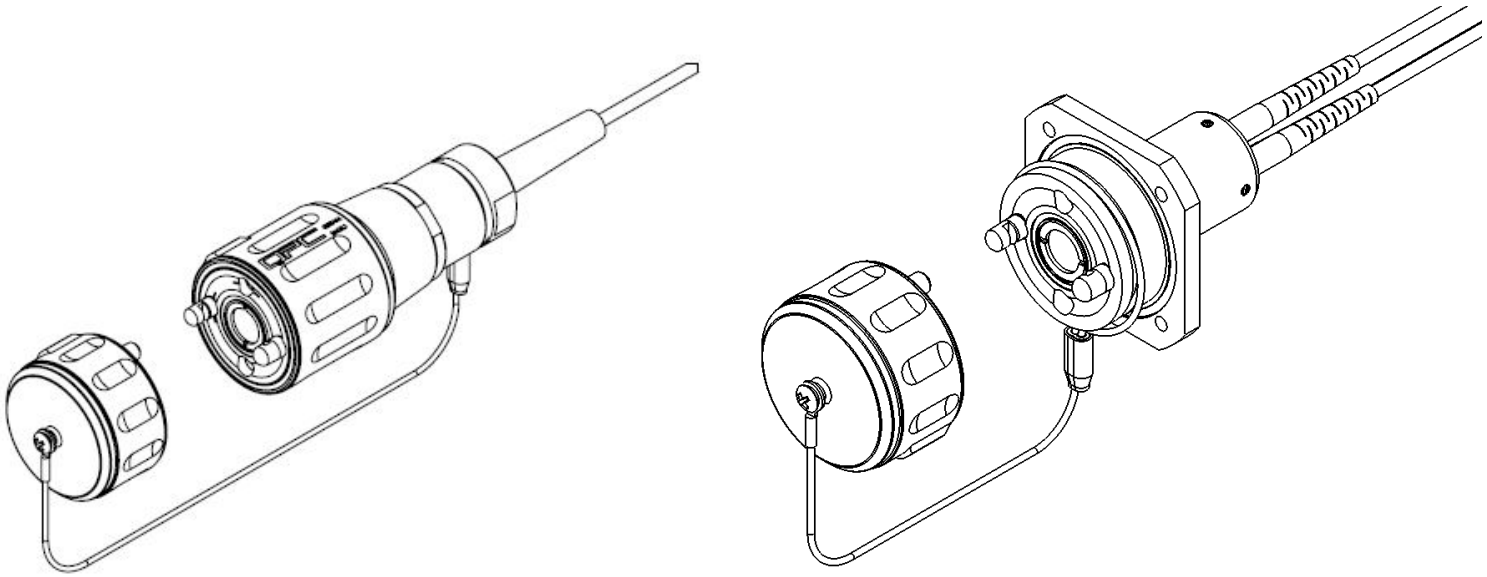

Preparer:	David Gonzalez Dir., Mfg. Eng.	Date:	2/23/2026
Approver 1:	Ramzy Zora Dir., Quality Assurance	Date:	2/23/2026
Approver 2:	Geoffrey Wolfe Design Engineer	Date:	2/23/2026

Document:	CAI-QBeam	**Revision:**	0
Release Date:	2/23/2026	**Revision Date:**	--/--/----

QPC Fiber Optic, LLC
27612 El Lazo Road, Laguna Niguel, CA 92677
www.qpcfiber.com
Ph: (949) 361-8855

TABLE OF CONTENTS

List of Figures 3
List of Tables 4
Scope 5
Tools 5
Torque Table 5
QBeam, Plug, Two and Four Channel 6
QBeam, Receptacle with Flange Mount or Jam Nut **Error! Bookmark not defined.**2
QBeam Receptacle, Jam Nut with Low Profile Backshell **Error! Bookmark not defined.**5

LIST OF FIGURES

Figure 1, QBeam Plug 6
Figure 2, QBeam Plug, Components 6
Figure 3, QBeam Plug, Crimp Support 7
Figure 4, QBeam Plug, Crimp Set Up 7
Figure 5, QBeam Plug, Crimp Assembly 8
Figure 6, QBeam Plug, Plug Body Assembly 8
Figure 7, QBeam Plug, Spacer Assembly 9
Figure 8, QBeam Plug, Coupling Ring Assembly 9
Figure 9, QBeam Plug, Coupling Ring to Body Plug Assembly 10
Figure 10, QBeam Plug, Backshell Assembly 10
Figure 11, QBeam Plug, Final Assembly 11
Figure 12, QBeam Receptacle, Flange Mount 12
Figure 13, QBeam Receptacle, Jum Nut 12
Figure 14, QBeam Receptacle, Components 12
Figure 15, QBeam Receptacle, Loading termini Into Receptacle Body 13
Figure 16, QBeam Receptacle, Backnut Assembly 14
Figure 17, QBeam Receptacle, Set Screws Installation 14
Figure 18, Beam Receptacle, Strain Relief Boots Assembly 14
Figure 19, QBeam Receptacle, Jam Nut with Low Profile Backshell 15
Figure 20, QBeam Receptacle Jam Nut, Components 15
Figure 21, QBeam Receptacle Jam Nut, Crimp Assembly 16
Figure 22, QBeam Receptacle Jam Nut, Crimp Set Up 16
Figure 23, QBeam Receptacle Jam Nut, Crimp Assembly 17
Figure 24, QBeam Receptacle Jam Nut, Loading Termini into Receptacle Body 17
Figure 25, QBeam Receptacle Jam Nut, Spacer Assembly 18
Figure 26, QBeam Receptacle Jam Nut, Backshell Assembly 18
Figure 27, QBeam Receptacle Jam Nut, Final Assembly 18

LIST OF TABLES

Table 1, Torque Table 6

SCOPE

This document describes the Assembly Instructions for the QBeam Connector Product Line.

TOOLS

TK-060 QPC General Connector Assembly Tool Kit – (Equivalent tools may be used)	
PT-500	Precise-Control .050” Screwdriver (1.27mm) Hex
PT-501	Precise-Control Screwdriver, 1/16" Hex
PT-502	Precise-Control Screwdriver, 3/32" Hex
PT-503	Precise-Control Screwdriver, 5/64" (2mm) Hex
PT-504	Precise-Control Screwdriver, 2.5mm Hex
PT-505	Screwdriver, Number 1 Phillips, 6-3/4" Overall Length
PT-506	Dial Torque-Measuring Wrench, 3/8" Square Drive, 0 to 150in.-lbs. and 0 to 18NM Torque
PT-532	Long-Nose Pliers with Flat Jaws, Cushion Grip, 6-3/4" Overall, Manual Jaws with Wire Cutter
PT-536	Crow's Foot Wrench Adjustable 3/8" Square Drive 0.0-1.125" (0-28.57mm) - Custom
PT-545	Crow's Foot Wrench Adjustable 1/2" Square Drive 0.236-1.771" (6-45mm) - Custom
PT-546	3/8" Female x 1/2" Male Square Drive Adapter, Chrome
PT-590	Torque-Measuring Screwdriver, Hex Drive, 2.5 to 11.5 in.-lbs. Adjustable Torque
PT-591	4" Drill Press Vise Assembly with 2 x Custom Composite Extended Jaws
PT-599	Bit Set, 5pc (.050" Hex, 1/16" Hex, 5/64" Hex, 3/32" Hex, 2.5mm Hex, #1 Phillips, #2 Phillips), 1/4" Shank, Overall Length 2"
PT-628	Tweezers, .013 Wide Slim Pointed Tips, Stainless Steel

TK-055 QPC QBeam Tool Kit – (Equivalent tools may be used)	
PT-540	Hydraulic Crimping Tool
PT-541	Die Set, 0.324 Hex, Hydraulic Hand Crimper
PT-226	QBeam Lens Cover Torque Driver
PT-010	Fiber Optic Termini Crimp Tool, 2mm & 3mm (Hex Size .178) *(for use with Receptacle Connector only)*
PT-227	Torque Tool, QBeam Backshell Fixture

TORQUE TABLE

Component	Backshell	Back Nut	Lens Cover	Button Head Screw	Set & Pan Screws
Torque Values	53 – 66 in-lb	53 – 66 in-lb	27 – 35 in-lb	2 – 3 in-lb	3 – 4 in-lb
	6.0 – 7.5 N • m	6.0 – 7.5 N • m	3 – 4 N • m	.23 – .34 N • m	.34 – .45 N • m

Table 1, Torque Table

QBEAM, PLUG, TWO AND FOUR CHANNEL

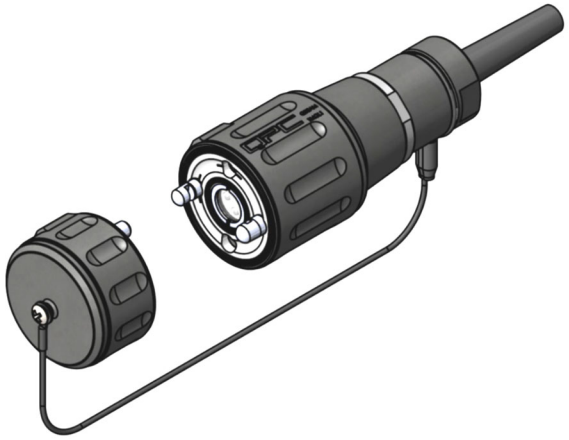

Figure 1, QBeam Plug

CABLE PREPARATION

Slide parts over cable in the following order, reference figure 2

1. Label (if applicable)
2. Back Nut w/ Dust Cover
3. Bend Limiter
4. Backshell
5. Coupling Ring

6. Spacer

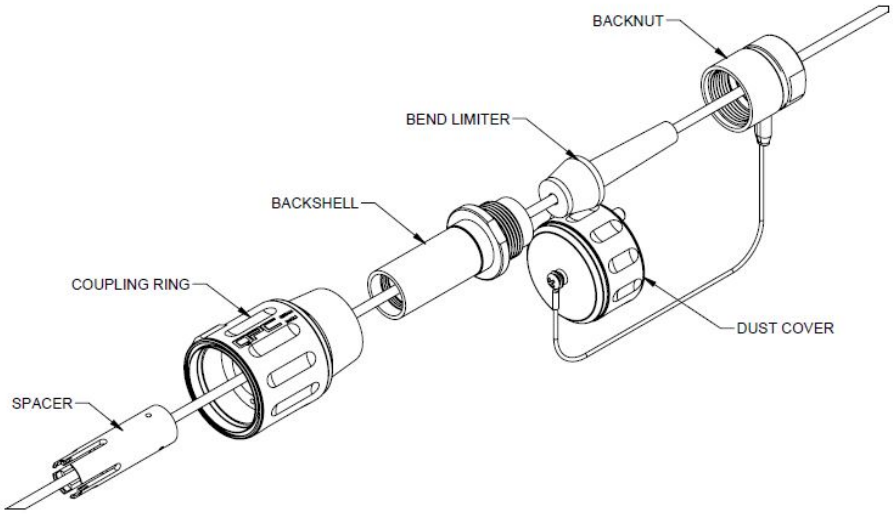

Figure 2, QBeam Plug, Components

STRIP CABLE

Strip cable jacket approximately 4” (100 mm) from end and place Crimp Support over fiber and. Bend Kevlar back over the Crimp Support. Slide Crimp over Kevlar and Crimp Support, reference figure 3. Secure crimp assembly with tape, crimping operation will be performed after termination and polish.

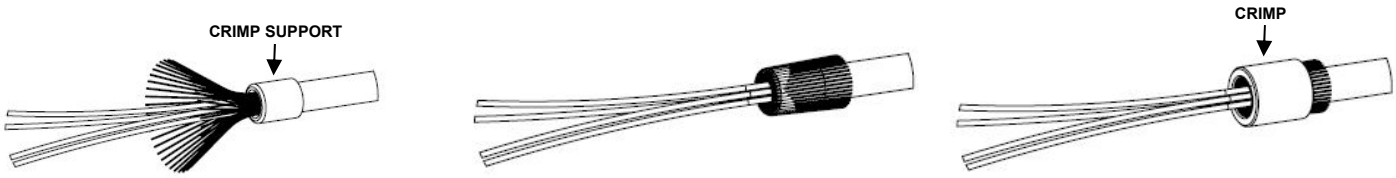

Figure 3, QBeam Plug, Crimp Support

TERMINATE

Before stripping the fiber, slide a Spring onto the jacket of each fiber. Use the Stripping Length Diagram located at the end of this assembly instruction to Terminate the Fiber Optic Termini. For Termination and Polishing details, reference CAI-TERM-01.

CRIMP TO CABLE

After Polish, remove tape from crimp assembly. Use Kevlar Scissors PT-062 to trim any excess Kevlar that is sticking out from the Crimp. Setup the Hydraulic Crimping tool PT-540 with the Die Set PT-541, The Crimp Die with Stop needs to be placed on the bottom facing out and with the Crimp against the stop as seen in the image below. Turn the knob clockwise on the Hydraulic Crimper, so that the handles can be pumped to crimp. Place the cable in the lower Crimp Die with the fiber facing out.
Pump the handles until the Crimp Dies are touching. Release crimp by turning knobs counterclockwise.

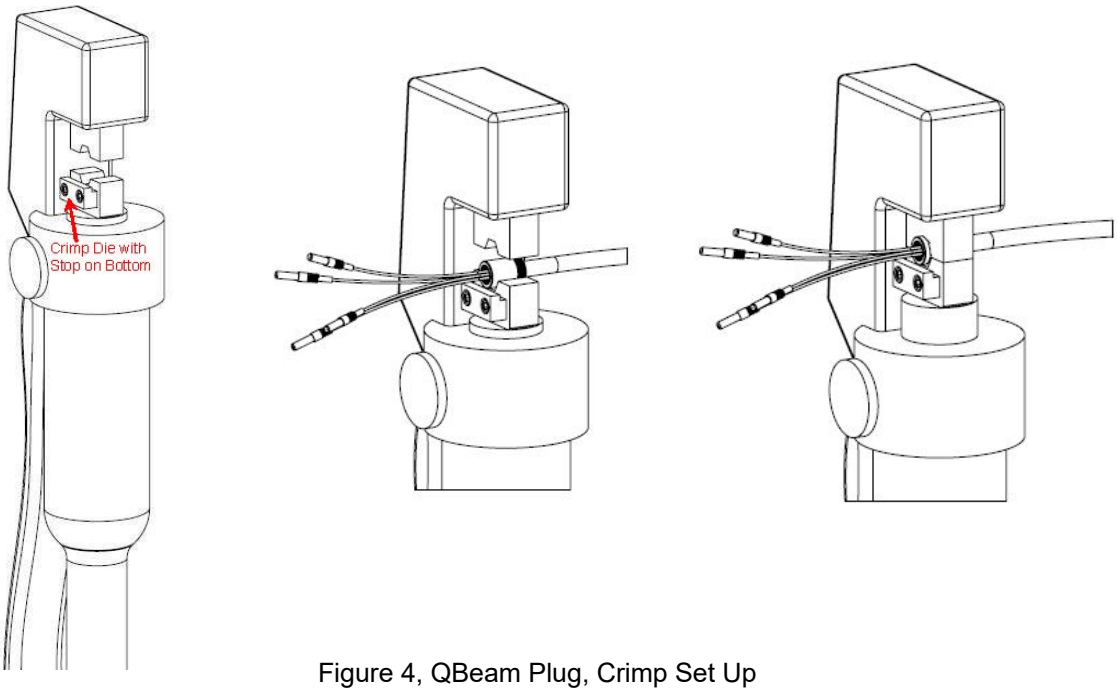

Figure 4, QBeam Plug, Crimp Set Up

The Crimp should have a hexagon shape as seen below. Excess Kevlar should be trimmed flush to the Crimp body.

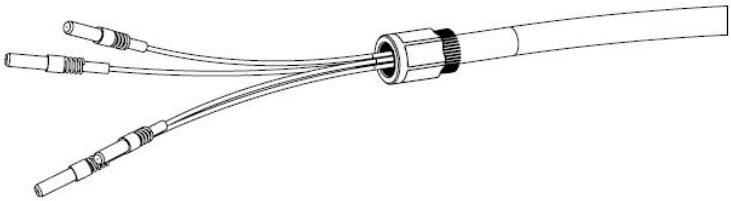

Figure 5, QBeam Plug, Crimp Assembly

POPULATE THE INSERT

Insert the Termini into the back of the Plug Body Cavities. Place the Insert Plate between the 900 µm buffered fibers making sure that the springs are between the Termini and Insert Plate. Apply a drop of Loctite 222 to the Button Head Screws and use Hex Tool PT-500 to screw the Insert Plate into the Plug Body. Torque the Button Head Screws to the values referenced in the Torque Table using Torque-Measuring Hex Driver PT-590 with Hex Bit .050" PT-599. Use a pair of Long Nose Pliers PT- 532 to ensure the Fiber Optic Termini are fully seated against the Drum Lenses.

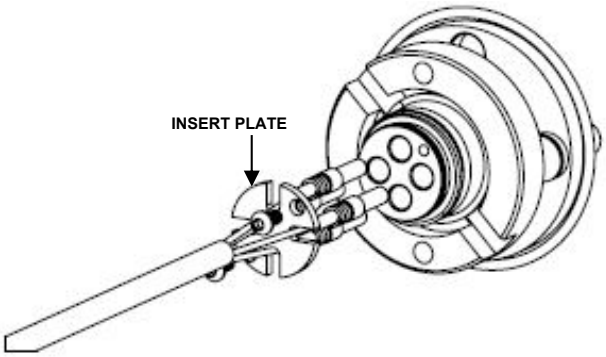

Figure 6, QBeam Plug, Plug Body Assembly

FINAL ASSEMBLY

Move Spacer forward so that it clips to the bottom of the Body Plug. Ensure that the Button Head Screws are positioned in the small slots on the Spacer. Use Cable to pull Crimp to bottom of the Spacer. Inspect the fibers by looking through the holes in the Spacer making sure that the fibers are not twisted or kinked. Use the Hex Driver PT-501 to tighten the set screws on the Spacer to lock the Crimp into place. Torque the Set Screws using Torque-Measuring Hex Drive PT-590 with Hex Bit 1/16-inch PT-599 to the values in the above Torque Table.

Perform a final visual check by looking through the holes of the Spacer to make sure that the fiber is not twisted or kinked.

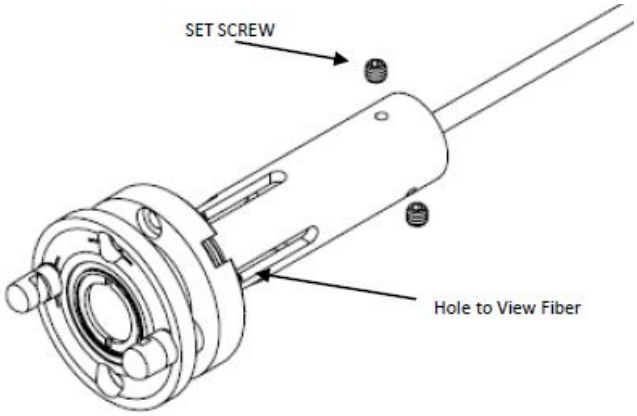

Figure 7, QBeam Plug, Spacer Assembly

Slide the Coupling Ring forward and align the Plug Body and Locking Ring in the Coupling Ring so that the Key on the Coupling Ring aligns between the two “Whiskers” on the Plug Body as seen below.

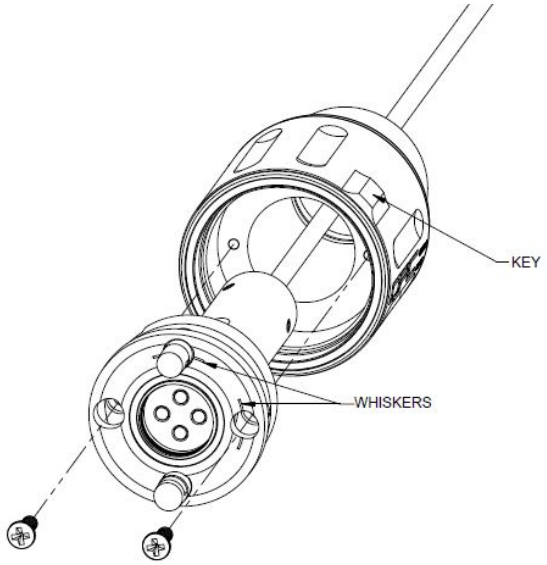

Figure 8, QBeam Plug, Coupling Ring Assembly

Once the holes are aligned correctly, apply a drop of Loctite 222 to the Pan Head Screws, drop into place and use Torque-Measuring Screwdriver PT-590 with #2 Phillips Bit PT-599 to screw the Body Plug into the Coupling Ring and torque to the values specified in the Torque Table.

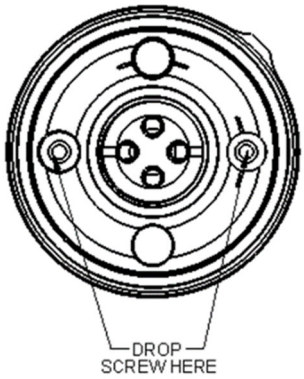

Figure 9, QBeam Plug, Coupling Ring to Body Plug Assembly

Place the Torque Tool QBeam Backshell Fixture PT-227 into the Drill Press PT-591. Hand-tighten the QBeam Plug to the Torque Fixture. Attach the Crow’s Foot Wrench PT-536 to the Dial Torque Measuring Wrench PT-506 and torque Backshell to the value specified in the Torque Table. Slide the Bend Limiter

into place. Slide the Back Nut forward and torque it using the Crow's Foot Wrench PT-536 with the Dial Torque Measuring Wrench PT-506 to the value specified in the Torque Table. Attach dust cover.

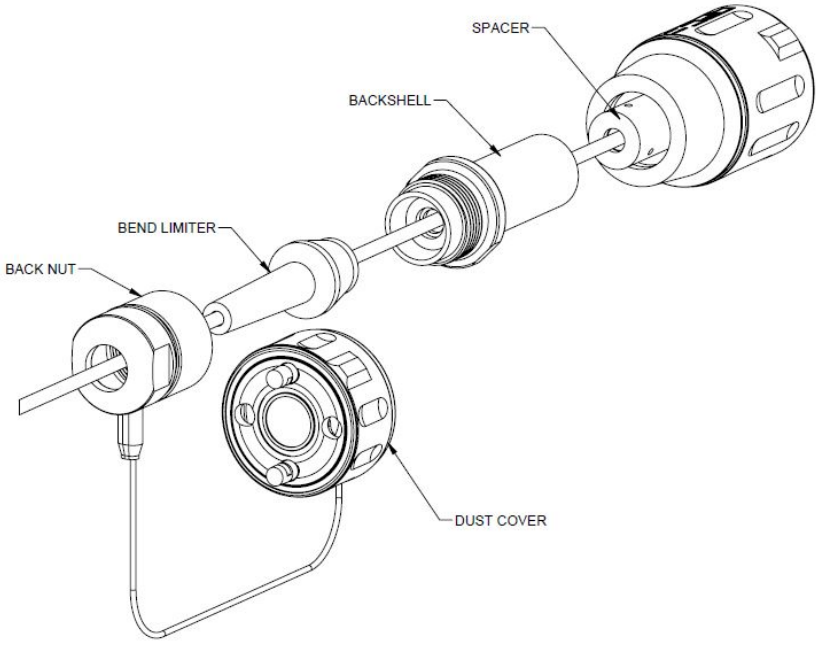

Figure 10, QBeam Plug, Backshell Assembly

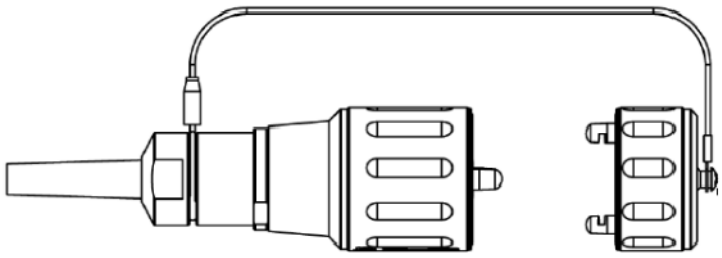

Figure 11, QBeam Plug, Final Assembly

QBEAM RECEPTACLE WITH FLANGE MOUNT OR JAM NUT

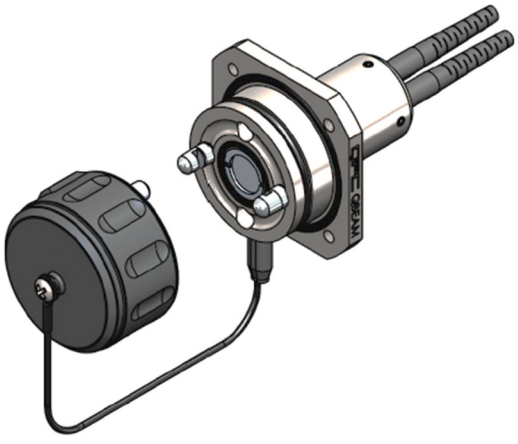

Figure 12, QBeam Receptacle, Flange Mount

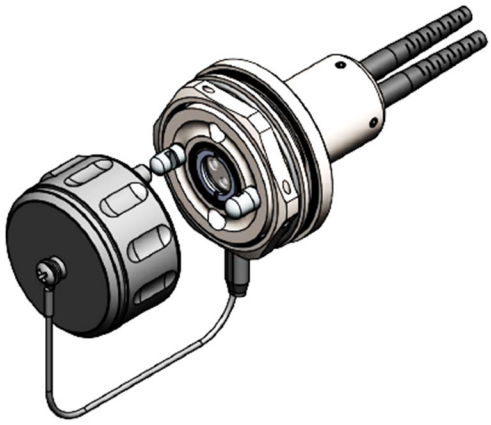

Figure 13, QBeam Receptacle, Jum Nut

CABLE PREPARATION

Slide parts over the 2mm or 3mm cable in the following order:

1. 2mm / 3mm Boots
2. 2mm / 3mm Crimps
3. Back Nut
4. Crimp Retainers

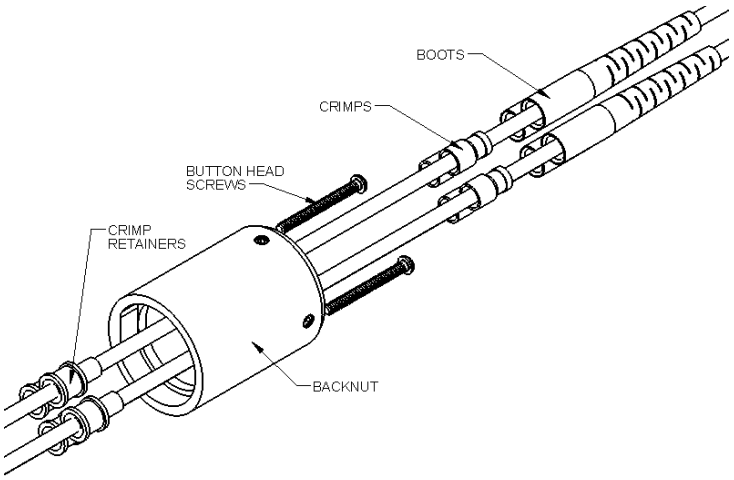

Figure 14, QBeam Receptacle, Components

STRIP CABLE AND CRIMP

Before stripping the fiber, slide a Spring onto the jacket of each fiber. Use the Stripping Length diagram located at the back of this instruction to strip the fiber leaving approximately 5.5mm of Kevlar for crimping. Slide Crimps up over the Crimp Retainers, ensuring that the Kevlar is positioned between them, then crimp using Fiber Optic Crimp Tool PT-010.

TERMINATE

Terminate and Polish the Fiber Optic Termini. For Termination and Polishing details, reference CAI-TERM-01.

POPULATE THE INSERT

Insert the Termini into the back of the Receptacle Body Cavities. Place the Insert Plate between the 900 µm fibers making sure that the springs are between the Fiber Optic Termini and Insert Plate. Apply a drop of Loctite 222 to the Button Head Screws and use Hex Tool PT-500 to screw the Insert Plate into the Receptacle Body. Torque the Button Head Screws to the value in the Torque Table using Torque-Measuring Hex Driver PT-590 with Hex Bit .050” PT-599.

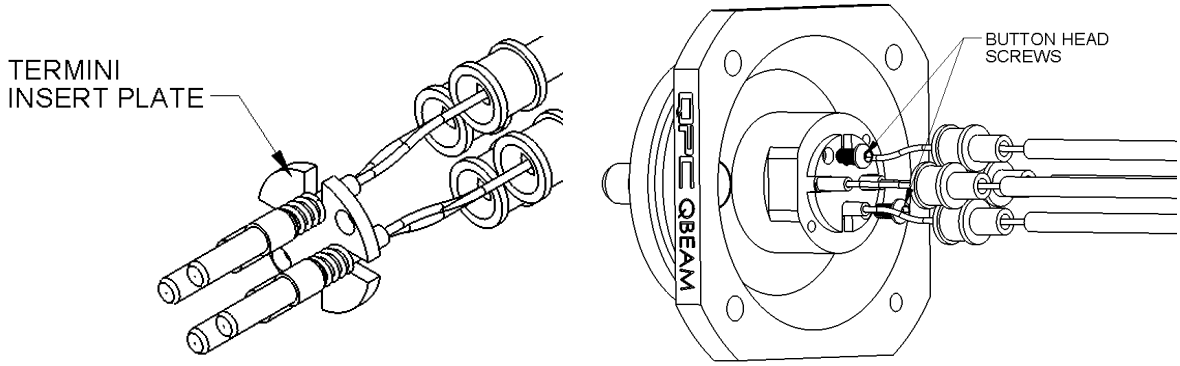

Figure 15, QBeam Receptacle, Loading termini Into Receptacle Body

Slide Back Nut onto Receptacle Body up to the Crimp Retainers ensuring that the flat on the Back Nut aligns with the flat on the Receptacle Body. Apply a drop of Loctite 222 on the Button Head Screws and use Hex Drive PT-500 to screw the Back Nut into the Receptacle Body. Torque the Button Head Screws to the value specified in the Torque Table using Torque-Measuring Hex Driver PT-590 with Hex Bit .050” PT-599.

Gently pull each cable down until the Retainer Crimp is seated inside the cavity of the Back Nut. Apply a drop of Loctite 222 to the four Set Screws and use Hex Tool PT-500 to secure the Back Nut to the 2mm / 3mm Crimp.

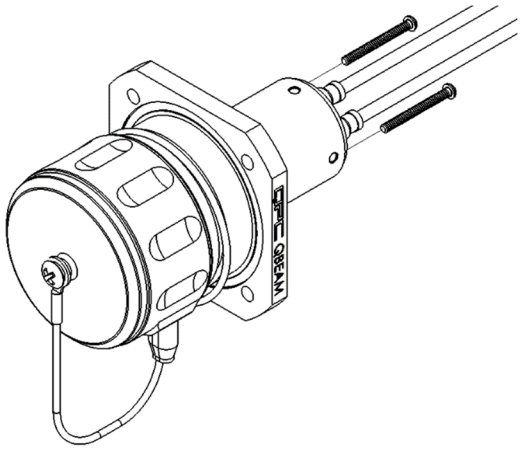

Figure 16, QBeam Receptacle, Backnut Assembly

Torque the Set Screws to the value specified in the Torque Table using Torque-Measuring Hex Driver PT-590 with Bit Size .050” PT-599.

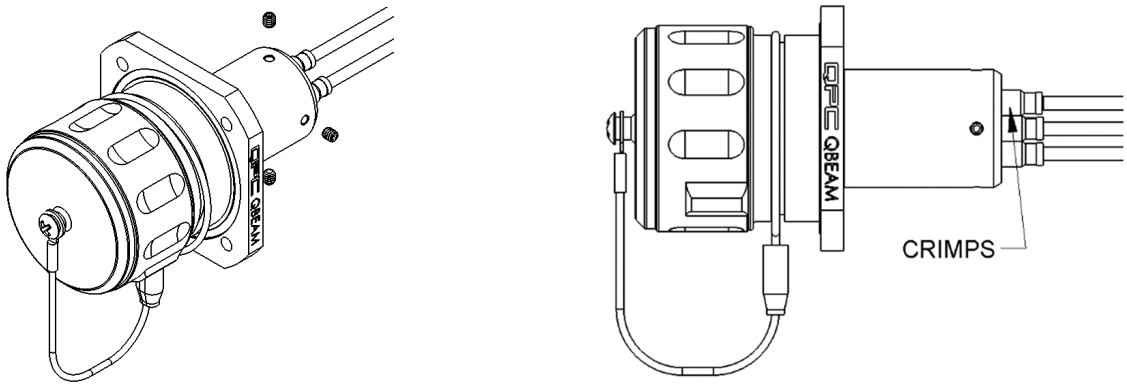

Figure 17, QBeam Receptacle, Set Screws Installation

Slide 2mm / 3mm Boots up and attach to the 2mm / 3mm Crimps. Install dust cover

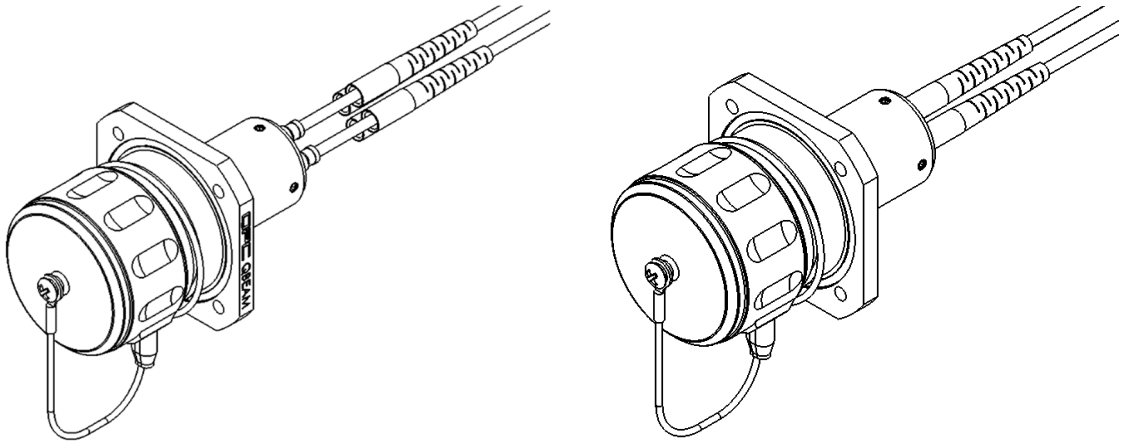

Figure 18, QBeam Receptacle, Strain Relief Boots Assembly

QBEAM RECEPTACLE, FLANGE MOUNT OR JAM NUT WITH LOW PROFILE BACKSHELL

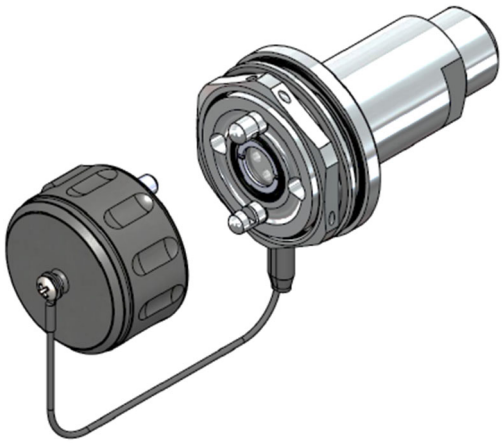

Figure 19, QBeam Receptacle, Jam Nut with Low Profile Backshell

CABLE PREPARATION

Slide parts over the cable in the following order:

1. Spacer
2. Backshell Cover

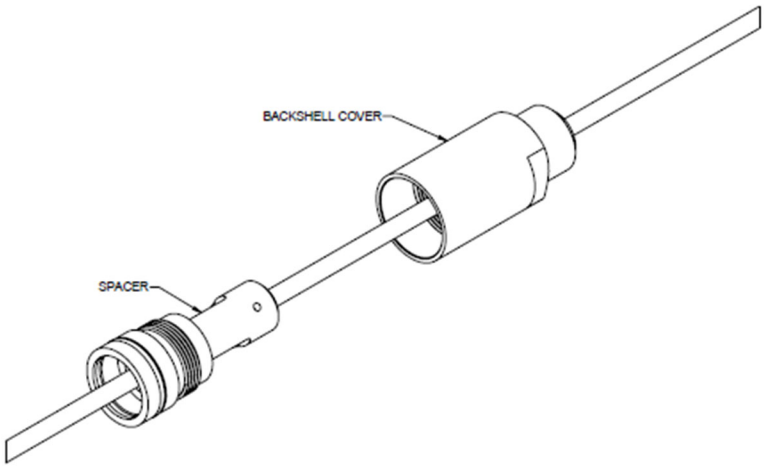

Figure 20, QBeam Receptacle Jam Nut, Components

STRIP CABLE AND CRIMP

Strip cable jacket approximately 4” (100 mm) from end and place Crimp Support over fiber. Bend Kevlar back over the Crimp Support. Slide Crimp over Kevlar and Crimp Support, reference figure 21. Secure crimp assembly with tape, crimping operation will be performed after termination and polish.

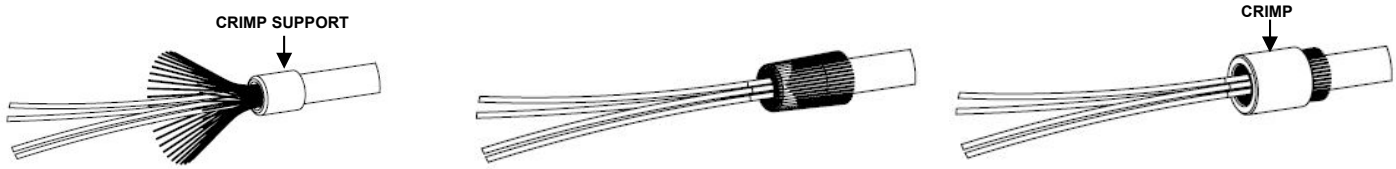

Figure 21, QBeam Receptacle Jam Nut, Crimp Assembly

TERMINATE

Before stripping the fiber, slide a Spring onto the jacket of each fiber Use the Stripping Length Diagram located at the end of this assembly instruction to Terminate the Fiber Optic Termini. For Termination and Polishing details, reference CAI-TERM-01.

CRIMP TO CABLE

After Polish, remove tape from crimp assembly. Use Kevlar Scissors PT-062 to trim any excess Kevlar that is sticking out from the Crimp. Setup the Hydraulic Crimping tool PT-540 with the Die Set PT-541, The Crimp Die with Stop needs to be placed on the bottom facing out and with the Crimp against the stop as seen in the image below. Turn the knob clockwise on the Hydraulic Crimper, so that the handles can be pumped to crimp. Place the cable in the lower Crimp Die with the fiber facing out.
Pump the handles until the Crimp Dies are touching. Release crimp by turning knobs counterclockwise.

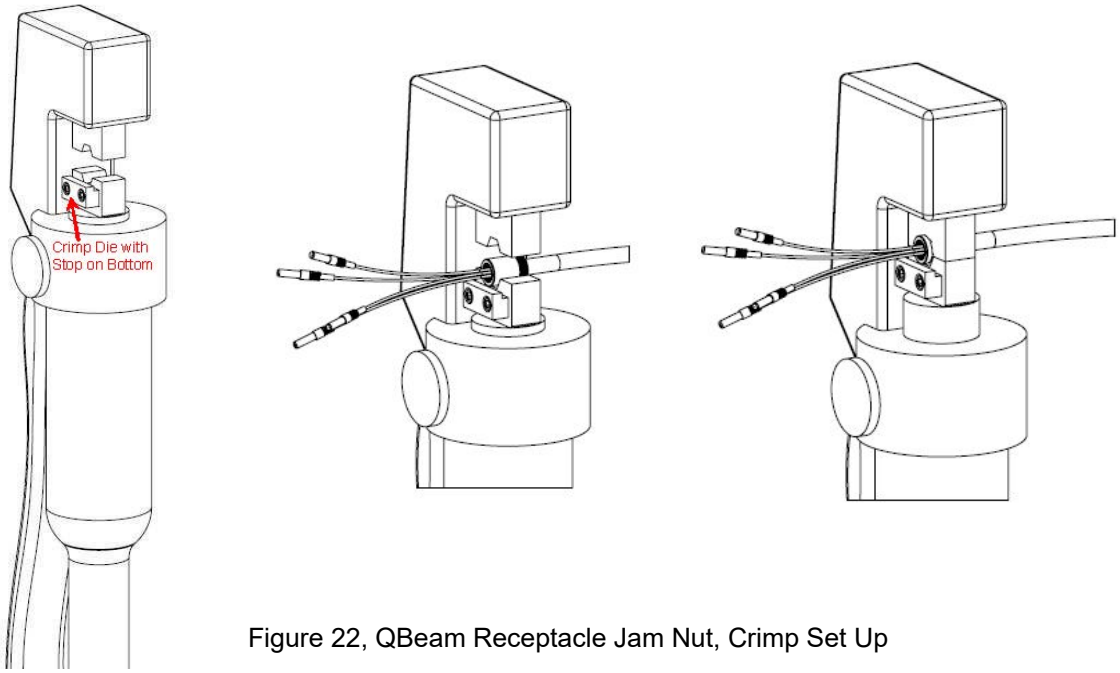

Figure 22, QBeam Receptacle Jam Nut, Crimp Set Up

After crimping, the Crimp should have a hexagon shape as seen below. Excess Kevlar should be trimmed flush to the Crimp.

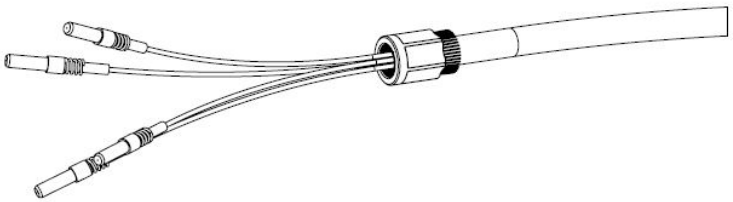

Figure 23, QBeam Receptacle Jam Nut, Crimp Assembly

Insert the Termini into the back of the Receptacle Body Cavities. Place the Insert Plate between the 900 µm buffered fibers making sure that the springs are between the Fiber Optic Termini and Insert Plate. Apply a drop of Loctite 222 to the Button Head Screws and use Hex Tool PT-500 to screw the Insert Plate into the Receptacle Body. Torque the Button Head Screws to the value specified in the Torque Table using Torque-Measuring Hex Driver PT-590 with Hex Bit .050” PT-599.

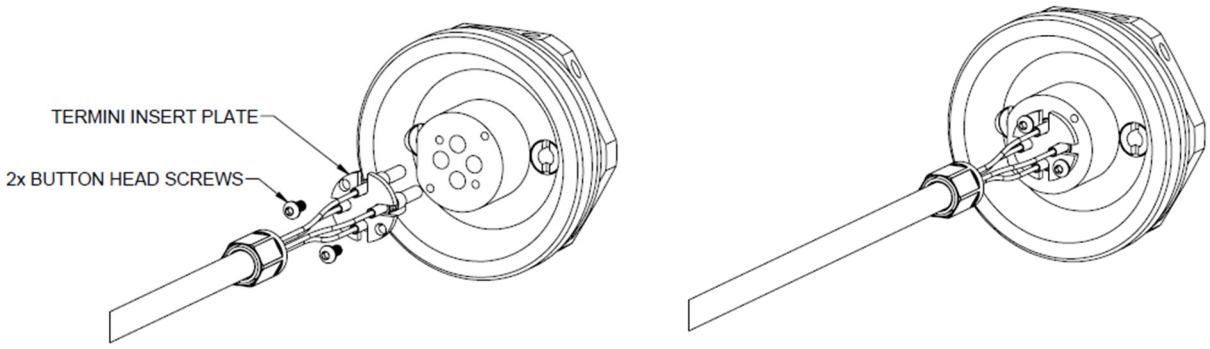

Figure 24, QBeam Receptacle Jam Nut, Loading Termini into Receptacle Body

Move Spacer forward until it bottoms out on the Body Receptacle. Ensure that the Button Head Screws are positioned so that the holes on the Spacer align with the holes on the Body. Apply a drop of Loctite 222 on the Button Head Screws and use Hex Tool PT-500 to tighten. Torque the Button Head Screws to the values referenced in the Torque Table using Torque-Measuring Hex Driver PT-590 with Hex Bit .050” PT-599. Use the Cable to pull Crimp to the bottom of the Spacer. Inspect the fibers by looking through the holes in the Spacer making sure that the fibers are not twisted or kinked. Use the Hex Driver PT-501 to tighten the set screws on the Spacer to lock the Crimp into place. Torque the Set Screws using Torque-Measuring Hex Drive PT-590 with Hex Bit 1/16-inch PT-599 to the values in the above Torque Table.

Perform a final visual check by looking through the holes of the Spacer to make sure that the fiber is not twisted or kinked.

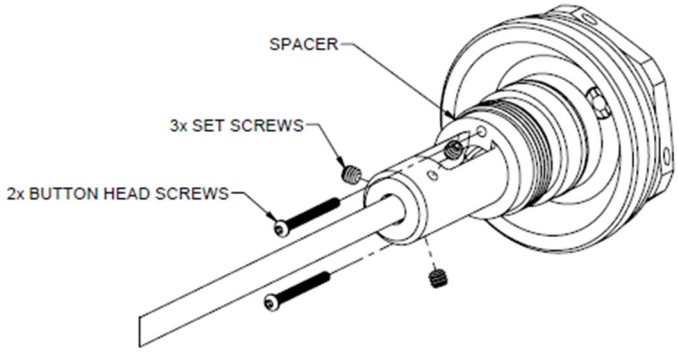

Figure 25, QBeam Receptacle Jam Nut, Spacer Assembly

Place the Torque Tool QBeam Backshell Fixture PT-227 into the Drill Press PT-591. Insert the alignment pins in the QBeam Receptacle to the cavities in the Torque Fixture. Attach the Crow's Foot Wrench PT-536 to the Dial Torque Measuring Wrench PT-506 and torque Backshell to the values in the above Torque Table. Attach dust cover.

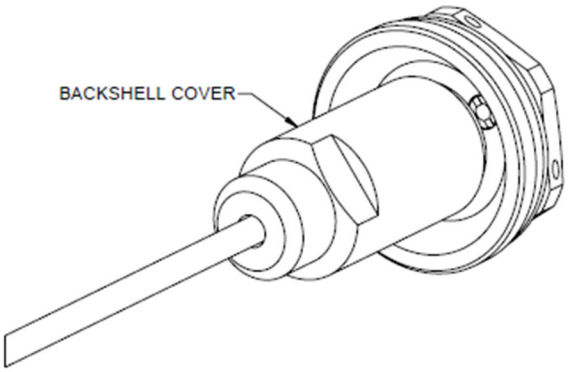

Figure 26, QBeam Receptacle Jam Nut, Backshell Assembly

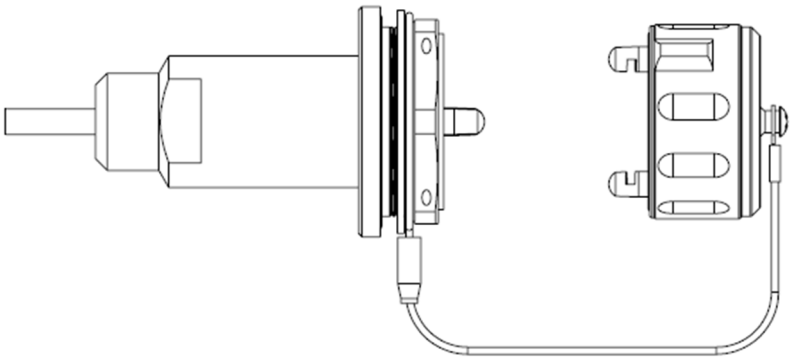

Figure 27, QBeam Receptacle Jam Nut, Final Assembly

Revision Change Record

Revision	Date	Section	Description	Approval
0	2/23/2026	New Release	New Release	RNZ